WAS P-73-6101

1. PARTS COMPLY WITH AMP SOLDERABILITY SPEC. NO. 109-11-3

2. CONTACT IS PLATED OVERALL WITH .000050 NICKEL, THEN .000030 GOLD OVER CONTACT LENGTH INDICATED AND MATTE TIN ON SOLDER TAIL END.

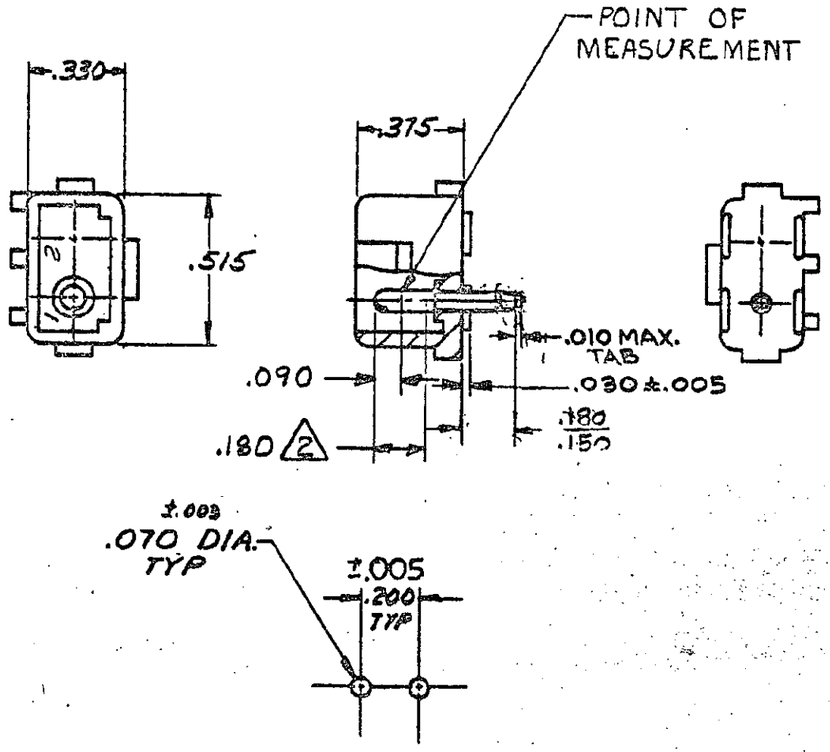

RECOMMENDED LAYOUT FOR .062 THICK P.C. BOARD

-2	-NATURAL	-GOLD 2
6- -1	-BLUE	-PRE TIN
2- -1	-RED	
350539-1	NYLON - NATURAL	COPPER ALLOY-PRE-TIN
ASSEMBLY NO.	HSG MATL & COLOR	PIN MATL & FINISH

Unpublished copy not to be reproduced nor published without written permission of AMP Incorporated

© 1973 BY AMP INCORPORATED. ALL RIGHTS RESERVED. AMP PRODUCTS COVERED BY PATENTS AND/OR PATENTS PENDING.

CUSTOMER COPY REFERENCE ONLY

LTR	REVISION RECORD	DR	CHK	DATE
N	OBS PER EC0738-0131-96	JH	RS	6-25-97
M	OBSOLETE 1--1 PER ECN CM-2706	NG	RS	8-9-92
L	OBS 2--2, 6--2, 9--1 PER CM 2213	TB	RS	3/20/89

NUMBER 350539

REQUIRED PER ASSEMBLY

DESCRIPTION

DR g. Edison 3-29-73

CHK 4/9/73 EM Poltovanovic

DE J. Kunkle

APP J. Kunkle

MATERIAL AND FINISH SEE TABLE

WIRE RANGE INSULATION

TOLERANCE EXCEPT AS NOTED ±.010

SCALE

AMP INCORPORATED HARRISBURG, PENNA

CLASS .084 DIA. PIN

TYPE POSITIVE LOCK

LOC CM B NO 350539 REV N

2 CIRCUIT MATE-N-LOK P.C. BOARD HEADER

DIMENSIONS IN INCHES. DO NOT SCALE PRINT.

AMP 1288 REV 11/68